B.E.G. LUXOMAT®

PD4-M-1C

Description	Colour	Part number	EAN number
PD4-M-1C-FC	white	92585	4007529925858
PD4-M-1C-SM	white	92580	4007529925803
PD4-M-1C-FM	white	92575	4007529925759



FC



SM



FM

Accessory	Colour	Part number	EAN number
PD4-S-SM	white	92142	4007529921423
PD4-S-FM	white	92163	4007529921638
PD4-S-FC	white	92254	4007529922543
IR-PD-1C	grey	92520	4007529925209
IR-PD-Mini	grey	92159	4007529921591
IR-PD-1C-E	grey	92077	4007529920778
IR-Adapter for Smartphones	black	92726	4007529927265
Wire basket BSK (Ø 200 x 90 mm)	white	92199	4007529921997
Socket IP54 for PD2- and PD4-SM	white	92161	4007529921614
Socket IP65 for PD4-SM	white	92375	4007529923755

TECHNICAL DATA

Voltage:	110 - 240 V AC 50 / 60 Hz
Typ. power input:	approx. 0.6 W
Detection area:	360°
Range:	max. Ø 24 m across max. Ø 8 m towards max. Ø 6.4 m small movements
Recommended mounting height:	2.5m
Degree / class of protection:	FC= IP20 SM= IP20 FM= IP20 / Class II
Ambient temperature:	-25 °C to +50 °C
Housing:	Polycarbonate, UV-resistant
Remote control-capable:	IR-Adapter for Smartphones, IR-PD-1C, IR-PD-1C-E, IR-PD-Mini
	Channel 1 (lighting control, potential-free)
Switching power:	2300 W, cos φ = 1 1150 VA, cos φ = 0.5 max. inrush current Ip (20ms) = 165A
Type of contact:	dry contact/NO – with tungsten pre-make contact
Time settings:	15 sec - 30 min, pulse
Lux value:	10 - 2000 Lux
	Mixed light measuring

PRODUCT INFORMATION

- Occupancy detector with extended detection area
- One potential-free (dry) contact
- Version as Master device
- Detection area can be extended with Slave devices
- Manual switching via push-button possible
- Additional functions can be set up using the optional remote control.
- Factory settings 10 min and 500 lux

B.E.G. LUXOMAT®

PD4-M-1C

DIMENSIONS DRAWING

FC

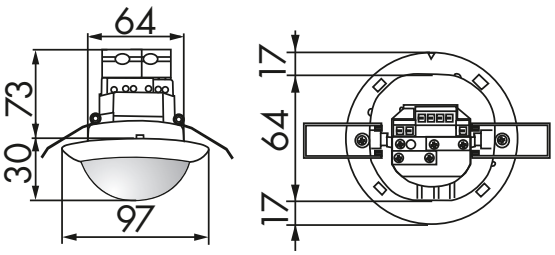

SM

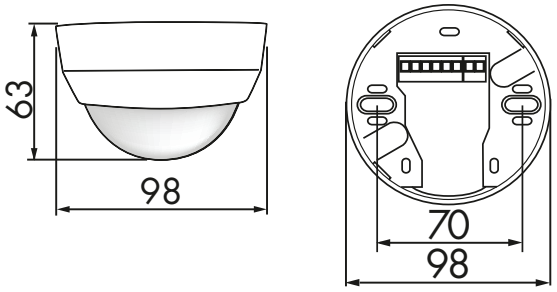

FM

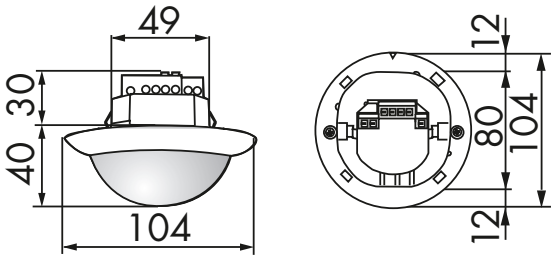

WIRING DIAGRAM

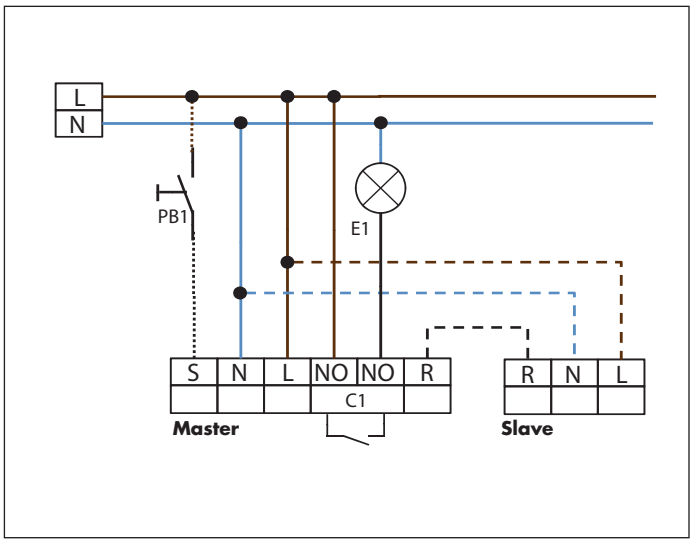

RANGE DIAGRAM

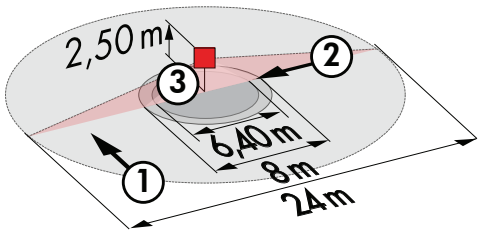

① Walking across
② Walking towards
③ Smaller movements