Pelée recessed

Design: Cubo Architects



The Pelée family consists of recessed, surface-mounted, suspended, and downlight luminaires.

The inner conical steps, characteristic for all Pelée luminaires, contribute to a comfortable, non-glaring spread of light.

Dimensions, recessed:
Diameter: 250 and 385 mm
Outer height: 30 mm
Built-in height: 85 mm

Powder coating:
White RAL 9010 Textura
Black Noir 900 Sablé
Silver grey MW300D
Corten brown YX355F

Lamp type:
LED

FOCUS-LIGHTING

Pelée 385 recessed

Design: Cubo Architects



Luminaire

Material:	cast aluminium, powder coated white RAL 9010 Textura black Noir 900 Sablé SN351F silver grey MW300D corten brown YX355F or sandblasted
Shade:	opalised or microprismatic acrylic
Mounting:	to be recessed
Plate thickness:	10-40 mm
Cut-out:	Ø355-360 mm
Clearances recommended horizontally: 50 mm	
Built-in height:	100 mm from lower ceiling edge, allowing cabling
Connection:	max 2 cables, 5x1.5 mm² into 5-pole terminal block, 2x2.5 mm²
Classification:	IP20, class I
Weight:	2.5 kg
Lamp type:	LED

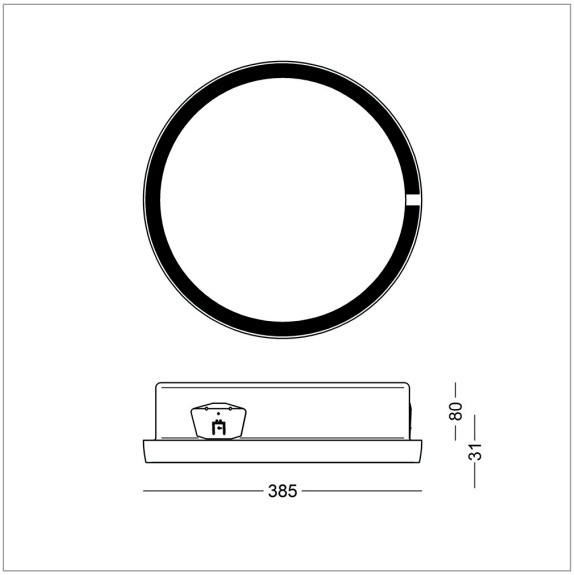

LED Data

LED:	324 mm board
Total consumption:	17, 23, or 33 W
Service life:	min 50,000 hours at ta 25°C L80B10
Colour temperature:	2700, 3000, or 4000 Kelvin alt. 2700-6500 K tunable
Colour rendering:	min 90 Ra
Colour accuracy:	3 steps SDCM
Driver 17-23 W:	500-700 mA, dimming optional
Driver 33 W:	1050 mA, incl Dali

Product codes

PELÉE Ø385								
Item Nos.	**Lamp type**	Select colour, colour temperature etc. in the table below.						
2840-	17 W LED, 500 mA							
2841-	23 W LED, 700 mA							
2843-	33 W LED, 1050 mA, incl. Dali							
Combine with:	Colour		Shade		Colour temperature		Dimming	
	1	white	empty	opalised	927	2700 K, 90 Ra	empty	no dimming
	3	sandblasted	M	microprismatic	930	3000 K, 90 Ra	D	Dali
	9	silver grey			940	4000 K, 90 Ra	V	1-10 V
	17	corten brown			9WD	TW, Dali, 90 Ra		
	66	noir 900						
Example item No.:	2841-1930D = Pelée 385, 23 W, white, 3000 K 90 Ra, Dali							
Accessories								
2834-20	Mounting plate for soft ceilings - click to see video							

FOCUS-LIGHTING

Pelée 250 recessed

Design: Cubo Architects



Luminaire

Material:	cast aluminium, powder coated white RAL 9010 Textura black Noir 900 Sablé SN351F silver grey MW300D corten brown YX355F or sandblasted
Shade:	opalised or microprismatic acrylic
Mounting:	to be recessed
Plate thickness:	10-40 mm
Cut-out:	Ø229-234 mm
Clearances recommended horizontally: 50 mm	
Built-in height:	100 mm from lower ceiling edge, allowing cabling
Connection:	max 2 cables, 5x1.5 mm² into 5-pole terminal block, 2x2.5 mm²
Classification:	IP20, class I
Weight:	2.2 kg
Lamp type:	LED

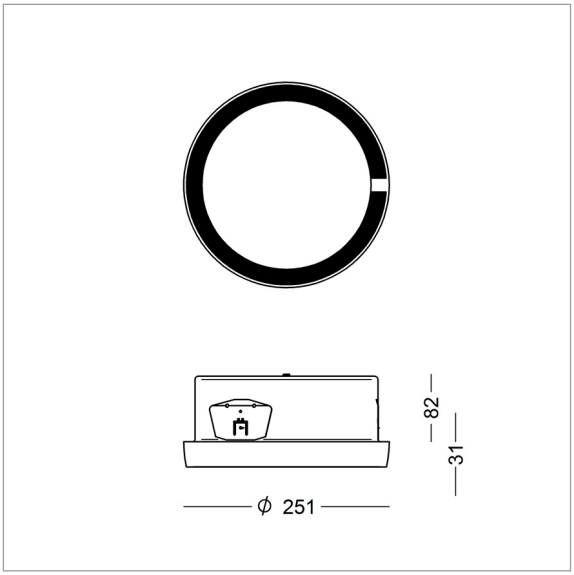

LED Data

LED:	213 mm board
Total consumption:	11 or 15 W
Driver:	350-500 mA
Service life:	min 50,000 hours at ta 25°C L80B10
Colour temperature:	2700, 3000, or 4000 Kelvin alt. 2700-6500 K tunable
Colour rendering:	min 90 Ra
Colour accuracy:	3 steps SDCM

Product codes

PELÉE Ø250								
Item Nos.	**Lamp type**	Select colour, colour temperature etc. in the table below.						
2837-	11 W LED, 350 mA							
2838-	15 W LED, 500 mA							
Combine with:	Colour		Shade		Colour temperature		Dimming	
	1	white	empty	opalised	927	2700 K, 90 Ra	empty	no dimming
	3	sandblasted	M	microprismatic	930	3000 K, 90 Ra	D	Dali
	9	silver grey			940	4000 K, 90 Ra	V	1-10 V
	17	corten brown			9WD	TW, Dali, 90 Ra		
	66	noir 900						
Example item No.:	2838-99WD = Pelée 385, 15 W, silver grey, tunable white, 90 Ra, Dali							
Accessories								
2832-20	Mounting plate for soft ceilings - click to see video							

FOCUS-LIGHTING