Nyx 450

Design: Vilhelm Lauritzen Architects

NYX 450 can be mounted on vertical pole or horizontal arm. Like the other luminaires in the Nyx family, Nyx 450 is available in black and two grey colours which suit galvanised poles very well. The luminaires are made of cast aluminium with screen in clear, hardened glass. They are simple and easy to maintain.

The NYX luminaires are equipped with LED with various lense options. Nyx 450 features flat bottom, resulting in reduced glaring and less light pollution. All Nyx luminaires meet the requirements of EN13201.





FOCUS-LIGHTING

Find our sales partner in your country under Contacts at www.focus-lighting.dk

Nyx 450 - FastFlex, T3

Design: Vilhelm Lauritzen Architects

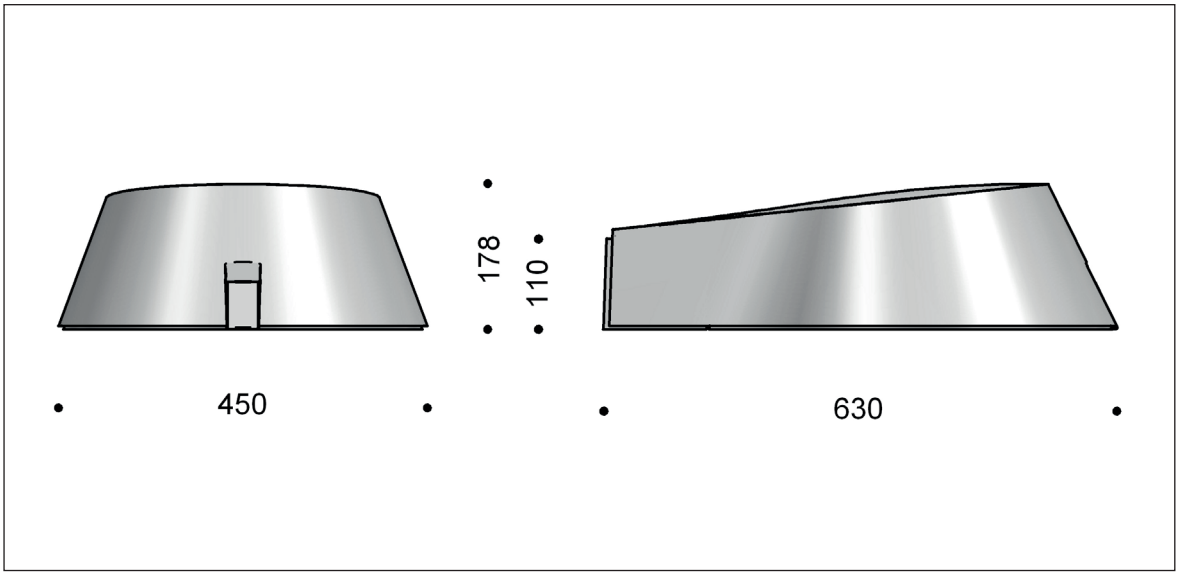

Luminaire specs:

Material:	Cast aluminium
Powder coating:	Graphite grey: YW355F
	Silver grey: Y2370I
	Black: Noir 900 Sablé SN351F
Screen:	3 mm hardened glass
Mounting:	On pole w. 60 or 76 mm top diameter, on 60 mm arm or on wall
Connection:	In the pole
	Supplied with 9.5 m lead 2 x 1 mm^2
	Version for arm: + 2 meter
Classification:	IP66 , class II
Impact resistance:	IK10
Weight:	11 kg
Wind sweeping area:	0.09 m2 (laterally)

Lamp specs:

FastFlex LED:	FF-DA, T3 lenses, for local roads, P, HS, and C classes, 2, 3, or 4 modules
Service life:	
up to 100 W:	min. 120,000 hours at ta max 25°, L80B10
100-160 W:	min. 100,000 hours at ta max 25°, L80B10
Temperature range:	-30 to +35° C
Colour temperature:	3000 or 4000 Kelvin
Colour rendering:	min 70 Ra, typically 75 Ra; 80 Ra optional
Colour accuracy:	4 Steps SDCM
Luminous power:	3000K: max 15900 lm, CLO
	4000K: max 16700 lm, CLO
Intensity class:	G*4
Output ratio:	95 per cent

Driver specs:

Driver, 2xFF:	Xitanium Full Xi FP 75 W 0.2-0.7 A, programmable
Inrush current:	max 46 A (50% after 250 µs)
Driver, 3xFF, 4xFF:	Xitanium Full Xi FP 150W 0.2-0.7A, programmable
Inrush current:	max 53 A (50% after 300 µs)
Nominal voltage, AC:	220-240 Vac
Operational input voltage, AC:	150-264 Vac
Nominal voltage, DC:	186-250 Vdc
Operational input voltage, DC:	165-275 Vdc
Nominal input frequency:	50-60 Hz
Operational input frequency:	45-66 Hz
Max pre-protection:	16 A
Surge protection:	L/N-GND: 10 kV, L-N: 6 kV, (SR driver: 8 kV)
Service life:	min 100,000 hours
Dimming:	Programming range 15-100 per cent or
	DALI (4-conductor cable)
	Line switch
	AmpDim
Alternatively:	DALI via Zhaga book 18 socket

FOCUS-LIGHTING

Nyx 450 - FastFlex, MEW

Design: Vilhelm Lauritzen Architects

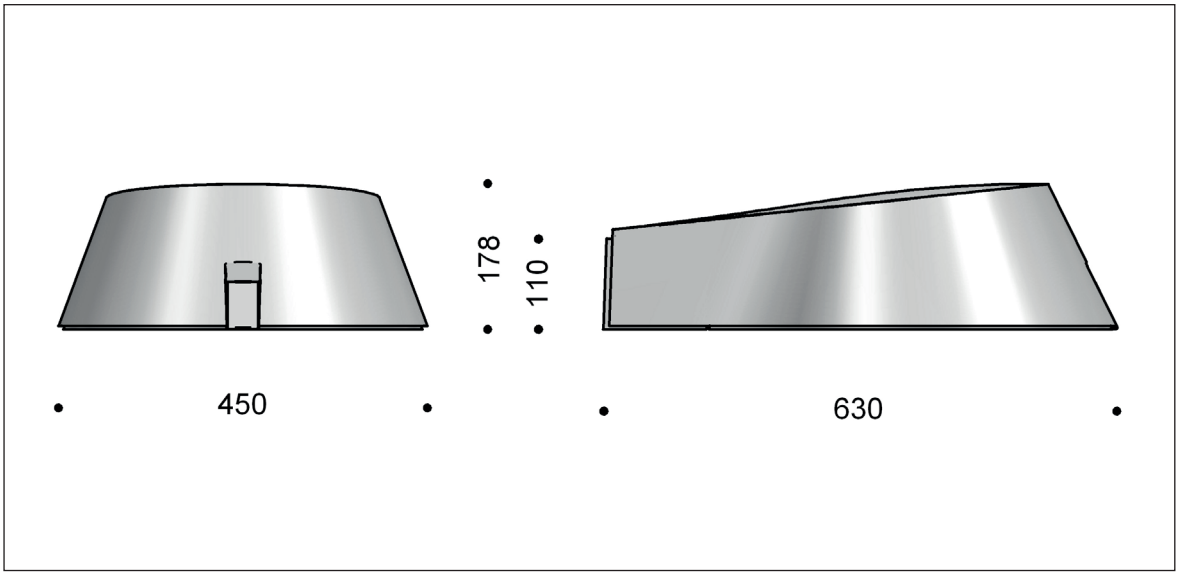

Luminaire specs:

Material:	Cast aluminium
Powder coating:	Graphite grey: YW355F
	Silver grey: Y2370I
	Black: Noir 900 Sablé SN351F
Screen:	3 mm hardened glass
Mounting:	On pole w. 60 or 76 mm top diameter, on 60 mm arm or on wall
Connection:	In the pole
	Supplied with 9.5 m lead 2 x 1 mm^2
	Version for arm: + 2 meter
Classification:	IP66 , class II
Impact resistance:	IK10
Weight:	11 kg
Wind sweeping area:	0.09 m2 (laterally)

Lamp specs:

FastFlex LED:	FF-DA, MEW lenses, for traffic roads, M classes, 2, 3, or 4 modules
Service life:	
up to 100 W:	min. 120,000 hours at ta max 25°, L80B10
100-160 W:	min. 100,000 hours at ta max 25°, L80B10
Temperature range:	-30 to +35° C
Colour temperature:	3000 or 4000 Kelvin
Colour rendering:	min 70 Ra, typically 75 Ra; 80 Ra optional
Colour accuracy:	4 Steps SDCM
Luminous power:	3000K: max 15900 lm, CLO
	4000K: max 16700 lm, CLO
Intensity class:	G*6
Output ratio:	98 per cent

Driver specs:

Driver, 2xFF:	Xitanium Full Xi FP 75 W 0.2-0.7 A, programmable
Inrush current:	max 46 A (50% after 250 µs)
Driver, 3xFF, 4xFF:	Xitanium Full Xi FP 150W 0.2-0.7A, programmable
Inrush current:	max 53 A (50% after 300 µs)
Nominal voltage, AC:	220-240 Vac
Operational input voltage, AC:	150-264 Vac
Nominal voltage, DC:	186-250 Vdc
Operational input voltage, DC:	165-275 Vdc
Nominal input frequency:	50-60 Hz
Operational input frequency:	45-66 Hz
Max pre-protection:	16 A
Surge protection:	L/N-GND: 10 kV, L-N: 6 kV, (SR driver: 8 kV)
Service life:	min 100,000 hours
Dimming:	Programming range 15-100 per cent or
	DALI (4-conductor cable)
	Line switch
	AmpDim
Alternatively:	DALI via Zhaga book 18 socket

FOCUS-LIGHTING

Nyx 450 - FastFlex, T4

Design: Vilhelm Lauritzen Architects

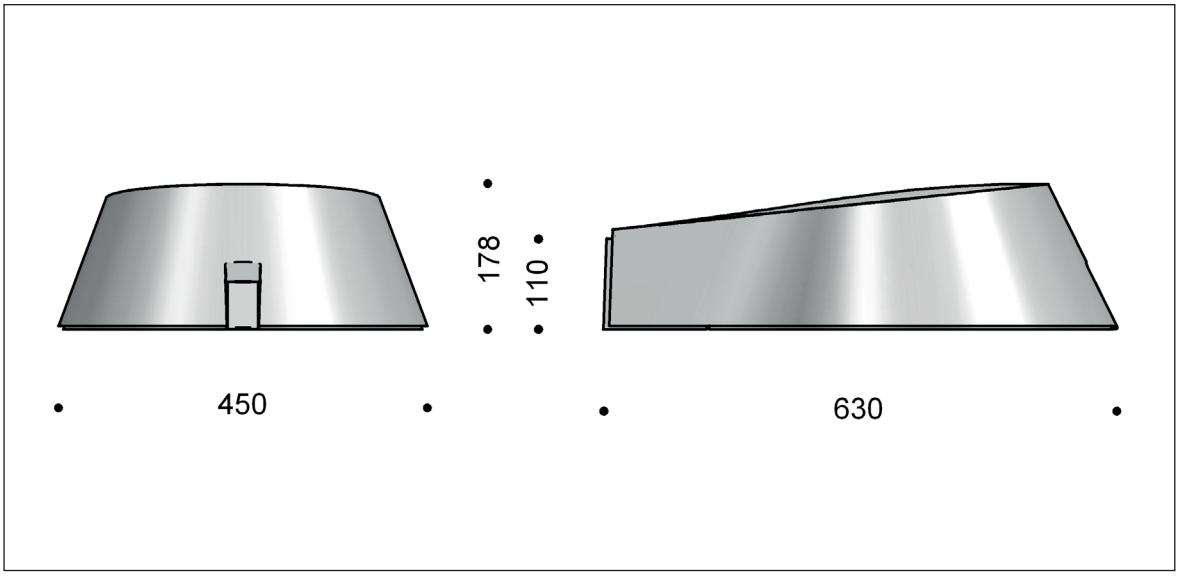

Luminaire specs:

Material:	Cast aluminium
Powder coating:	Graphite grey: YW355F
	Silver grey: Y2370I
	Black: Noir 900 Sablé SN351F
Screen:	3 mm hardened glass
Mounting:	On pole w. 60 or 76 mm top diameter, on 60 mm arm or on wall
Connection:	In the pole
	Supplied with 9.5 m lead 2 x 1 mm^2
	Version for arm: + 2 meter
Classification:	IP66 , class II
Impact resistance:	IK10
Weight:	11 kg
Wind sweeping area:	0.09 m2 (laterally)

Lamp specs:

FastFlex LED:	FF-DA, T4 lenses, for roundabouts, 2, 3, or 4 modules
Service life:	
up to 100 W:	min. 120,000 hours at ta max 25°, L80B10
100-160 W:	min. 100,000 hours at ta max 25°, L80B10
Temperature range:	-30 to +35° C
Colour temperature:	3000 or 4000 Kelvin
Colour rendering:	min 70 Ra, typically 75 Ra; 80 Ra optional
Colour accuracy:	4 Steps SDCM
Luminous power:	3000K: max 15900 lm, CLO
	4000K: max 16700 lm, CLO
Intensity class:	G*3
Output ratio:	96 per cent

Driver specs:

Driver, 2xFF:	Xitanium Full Xi FP 75 W 0.2-0.7 A, programmable
Inrush current:	max 46 A (50% after 250 µs)
Driver, 3xFF, 4xFF:	Xitanium Full Xi FP 150W 0.2-0.7A, programmable
Inrush current:	max 53 A (50% after 300 µs)
Nominal voltage, AC:	220-240 Vac
Operational input voltage, AC:	150-264 Vac
Nominal voltage, DC:	186-250 Vdc
Operational input voltage, DC:	165-275 Vdc
Nominal input frequency:	50-60 Hz
Operational input frequency:	45-66 Hz
Max pre-protection:	16 A
Surge protection:	L/N-GND: 10 kV, L-N: 6 kV, (SR driver: 8 kV)
Service life:	min 100,000 hours
Dimming:	Programming range 15-100 per cent or
	DALI (4-conductor cable)
	Line switch
	AmpDim
Alternatively:	DALI via Zhaga book 18 socket

FOCUS-LIGHTING

Nyx 450 - FastFlex, PX

Design: Vilhelm Lauritzen Architects

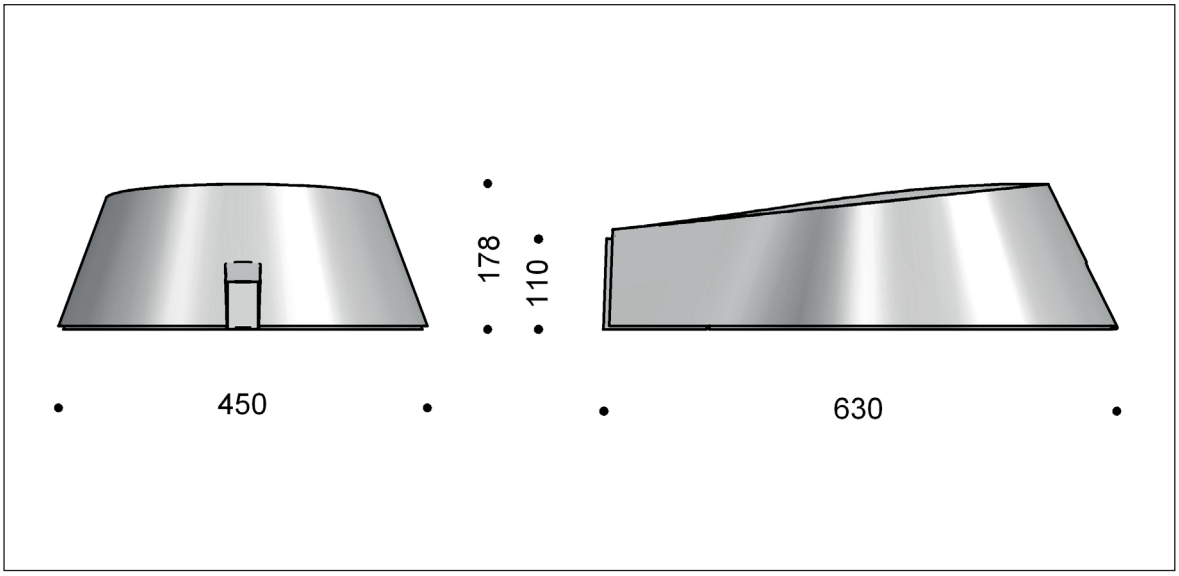

Luminaire specs:

Material:	Cast aluminium
Powder coating:	Graphite grey: YW355F
	Silver grey: Y2370I
	Black: Noir 900 Sablé SN351F
Screen:	3 mm hardened glass
Mounting:	On pole w. 60 or 76 mm top diameter,
	on 60 mm arm or on wall
Connection:	In the pole
	Supplied with 9.5 m lead 2 x 1 mm^2
	Version for arm: + 2 meter
Classification:	IP66 , class II
Impact resistance:	IK10
Weight:	11 kg
Wind sweeping area:	0.09 m2 (laterally)

Lamp specs:

FastFlex LED:	FF-DA, PX lenses, for pedestrian crossings,
	2 or 3 modules
Service life:	
up to 100 W:	min. 120,000 hours at ta max 25°, L80B10
100-160 W:	min. 100,000 hours at ta max 25°, L80B10
Temperature range:	-30 to +35° C
Colour temperature:	3000 or 4000 Kelvin
Colour rendering:	min 70 Ra, typically 75 Ra; 80 Ra optional
Colour accuracy:	4 Steps SDCM
Luminous power:	3000K: max 15900 lm, CLO
	4000K: max 16700 lm, CLO
Output ratio:	94 per cent

Driver specs:

Driver, 2xFF:	Xitanium Full Xi FP 75 W 0.2-0.7 A, programmable
Inrush current:	max 46 A (50% after 250 µs)
Driver, 3xFF:	Xitanium Full Xi FP 150W 0.2-0.7A, programmable
Inrush current:	max 53 A (50% after 300 µs)
Nominal voltage, AC:	220-240 Vac
Operational input voltage, AC:	150-264 Vac
Nominal voltage, DC:	186-250 Vdc
Operational input voltage, DC:	165-275 Vdc
Nominal input frequency:	50-60 Hz
Operational input frequency:	45-66 Hz
Max pre-protection:	16 A
Surge protection:	L/N-GND: 10 kV, L-N: 6 kV, (SR driver: 8 kV)
Service life:	min 100,000 hours
Dimming:	Programming range 15-100 per cent or
	DALI (4-conductor cable)
	Line switch
	AmpDim
Alternatively:	DALI via Zhaga book 18 socket

FOCUS-LIGHTING

Nyx 450 - FastFlex - Item Nos.

Design: Vilhelm Lauritzen Architects

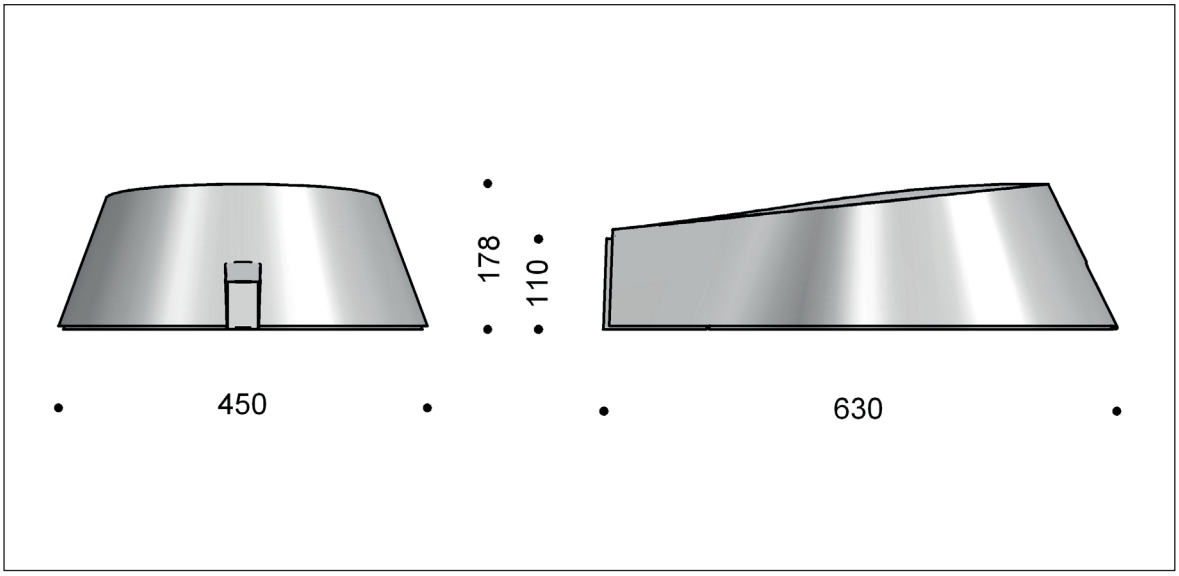

Product codes:

NYX 450 FastFlex LED with T3 lenses for local roads, P, HS, and C classes		
Item Nos.	**Lamp type**	Select colour, colour temperature, etc. in the table below.
9930-	2xFF-DA, T3, max 8400 lm, programmable	
9931-	3xFF-DA, T3, max 12600 lm, programmable	
9932-	4xFF-DA, T3, max 16700 lm, programmable	

NYX 450 FastFlex LED with MEW lenses for traffic roads, M classes		
Item Nos.	**Lamp type**	Select colour, colour temperature, etc. in the table below.
9950-	2xFF-DA, MEW, max 8400 lm, programmable	
9951-	3xFF-DA, MEW, max 12600 lm, programmable	
9952-	4xFF-DA, MEW, max 16700 lm, programmable	

NYX 450 FastFlex LED with T4 lenses for roundabouts and wide roads		
Item Nos.	**Lamp type**	Select colour, colour temperature, etc. in the table below.
9940-	2xFF-DA, T4, max 8400 lm, programmable	
9941-	3xFF-DA, T4, max 12600 lm, programmable	
9942-	4xFF-DA, T4, max 16700 lm, programmable	
NYX 450 FastFlex LED with PX lenses for crossings		
Item Nos.	**Lamp type**	Select colour, colour temperature, etc. in the table below.
9955-	2xFF-DA, PX, max 8400 lm, programmable	
9956-	3xFF-DA, PX, max 12600 lm, programmable	

Combine with:	**Colour**		**Colour temperature**		**Mounting**		**Dimming/control**		**Protection class**	
	4	graphite grey	730	3000 K, 70 Ra	T	pole top	empty	programmable	empty	class II
	9	silver grey	740	4000 K, 70 Ra	U	side entry	D	Dali	J	class I
	66	black noir 900	830*	3000 K, 80 Ra	G	mid-column Ø60	F	phase Line switch		
			840*	4000 K, 80 Ra	G76	mid-column Ø76	Z	voltage AmpDim		
			* Note: longer lead times				R	socket incl. SR driver, Zhaga book 18		
							RC	socket, City Touch incl. SR driver, Zhaga book 18		
Example:	9941-9740TJ = Nyx 450 3xFF-DA, MEW, programmable, silver grey, 4000 K 70 Ra, pole top, class I									
Option										
90239-2	Wall bracket									

FOCUS-LIGHTING

Nyx 450

Design: Vilhelm Lauritzen Architects



FOCUS-LIGHTING

Find our sales partner in your country under Contacts at www.focus-lighting.dk