Nyx 330 - pole top luminaire

Design: Vilhelm Lauritzen Architects



NYX is a series of external luminaires for wall or column mounting. Nyx is the answer to today's demands for pleasant and well-defined light in urban areas.

Nyx 330 is available for post-top and wall mounting. Like the rest of the Nyx series, it comes in black, corten brown, and two grey colours suitable for galvanised standard columns. Made of cast silumin with frosted or opal-white polycarbonate shades, the luminaires are simple and safe and do not invite to vandalism.

The NYX luminaires are available with LED, and the shade edge being visible, it offers optical guidance.

NYX 330 is suitable for mounting on columns from three to six meters. The single luminaire can be used on any type of column with a top diameter of 60 mm. Adapter for 48 and 42 mm posts available. Nyx 330 is also available for mid-post mounting of more luminaires on a Ø60 mm cylinder.

Two or more luminaires can be mounted on each column. Luminaires two-by-two will be the solution for low columns - images can be found at www.focus-lighting.dk.

The Nyx 330 luminaire can be mounted on a double arm, available in two sizes: 800 or 1600 mm. The standard version is in hot-dipped galvanised steel and can be powder coated in the same colours as the luminaires.





FOCUS-LIGHTING

Nyx 330 Comfort

Design: Vilhelm Lauritzen Architects

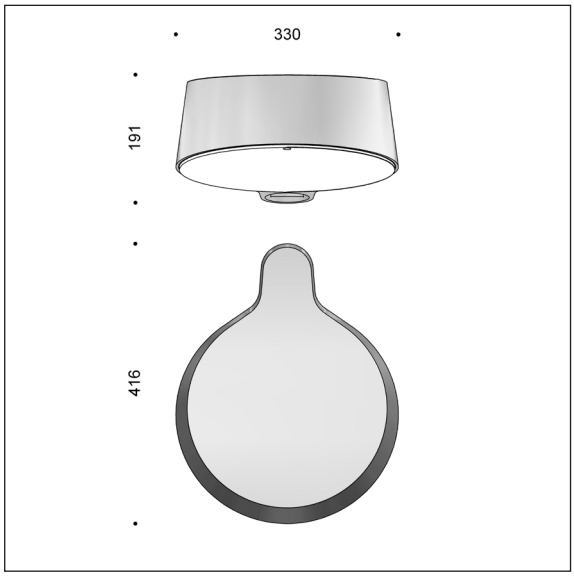

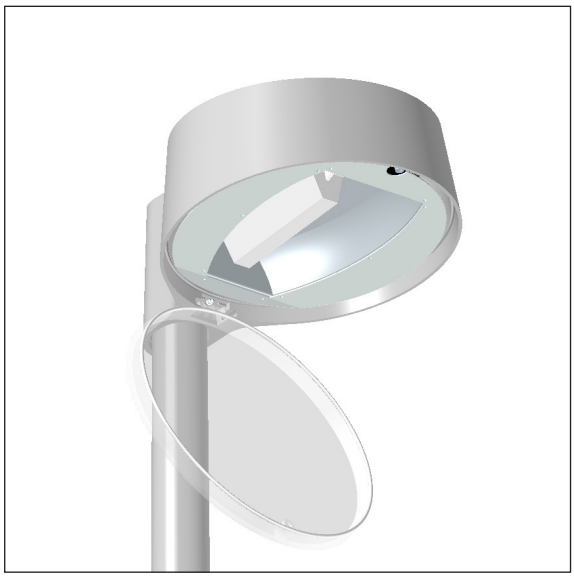

Driver specs:

Driver:	Xitanium Full Xi FP 40 W 0.3-1.0 A
Inrush current::	max 22 A (50% after 290 µs)
Surge protection:	L/N-GND: 10 kV, L-N: 6 kV, (SR driver: 8 kV)
Service life:	min 100,000 hours
Dimming/control:	5 steps dimming within the lumen intervals
Alternatively:	DALI-2 (4/5-conductor), LineSwitch, or via Zhaga book 18 socket

Luminaire specs:

Material:	Cast aluminium
Finish:	Raw anodized Graphite grey: YW355F Silver grey: Y2370I Black: Noir 900 Sablé, SN351F Corten brown: YX355F
Diffuser:	Polycarbonate, semitransparent or opal white Lamellas as option
Mounting:	On post w. 60 mm top diameter Adapter for 48 and 42 mm columns - see below Available for mid-column mounting for multiple luminaires on Ø60mm columns.
Connection:	In the pole. The luminaire is supplied with 5.5 m lead, 2 x 1 mm^2.
Classification:	IP65, class II
Corrosion class:	C4, C5 optional
Impact resistance:	IK10; with Zhaga socket IK09
Weight:	8 kg
Wind sweeping area:	0.053 m2 (laterally)

LED specs:

LED type:	Comfort - for low columns
Service life:	min 100,000 hours at ta max 25°, L90B10 Constant lumen output
Temperature range:	-30 to +35° C
Colour temperature:	2700, 3000, or 4000 K
Colour rendering:	80 Ra, 70 Ra optional
Colour accuracy:	5 Steps SDCM
Intensity class:	G*1
Luminous flux:	The luminous flux range quoted below is from the LED light source. Apply output ratio in order to calculate luminous flux out of the luminaire.
LED-lumen, Ra 80	2700 K: 285-3150 lm, energy eff class E 3000 K: 300-3300 lm, energy eff class E 4000 K: 325-3500 lm, energy eff class D
Output ratio:	74 per cent

FOCUS-LIGHTING

Nyx 330 - Comfort - Product codes

Design: Vilhelm Lauritzen Architects

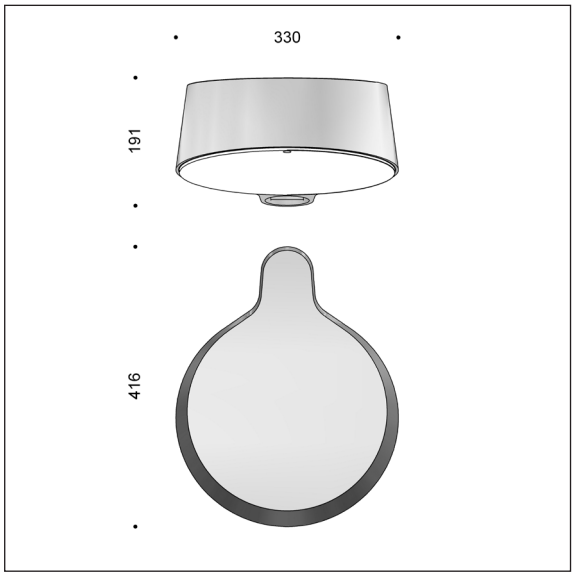

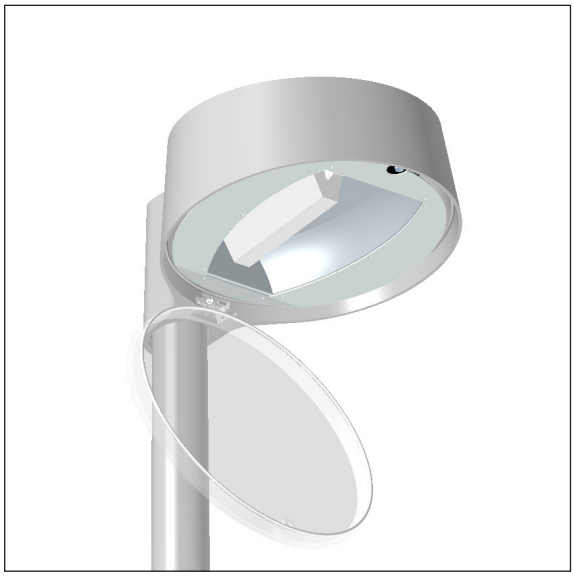

Product codes:

NYX 330 Comfort with programmable driver											
Item No.	**Lamp type**	Select colour, colour temperature, etc. in the table below.									
8910-	LED Comfort programmable, 5.5 m lead										
Combine with:	**Colour**		**Colour temperature**		**Dimming/control**		**Protection class**		**Mounting**		
	01	raw anodized	730	3000 K, 70 Ra	empty	programmable *)	empty	class II	empty	post top	
	3	black RAL 9005	740	4000 K, 70 Ra	D	Dali-2	J	class I	G	mid-post	
	4	graphite grey	827*	2700 K, 80 Ra	F	LineSwitch					
	9	silver grey	830*	3000 K, 80 Ra	R	Zhaga book 18 socket upwards					
	17	corten brown	840*	4000 K, 80 Ra	RC	Zhaga book 18 socket, City Touch/Interact City					
	66	black noir 900	* Longer lead times		S	Zhaga book 18 socket downwards					
					RS	Zhaga book 18 socket up and downwards					
	Corrosion protection										
	C5	C5 coating	In the case of extra corrosion protection, add C5 to the colour code; example: 8910-9C5830								
Example, product:	8910-9830J = Nyx 330 Comfort, silver grey, 3000 K, Ra 80, class I										
*) programmable	When ordering, please state luminous flux as the required LED-lumen + dimming level + dimming period										
Example, profile:	2000 lm 50% 22-06 (fifty per cent dimming from 10 pm to 6 am)										
06034	Lamellas for the shade										
1712-1	Adapter for 48 or 42 mm post										

FOCUS-LIGHTING